www.standard-europe.eu

PlusAir

Data Sheet PA-5FAT

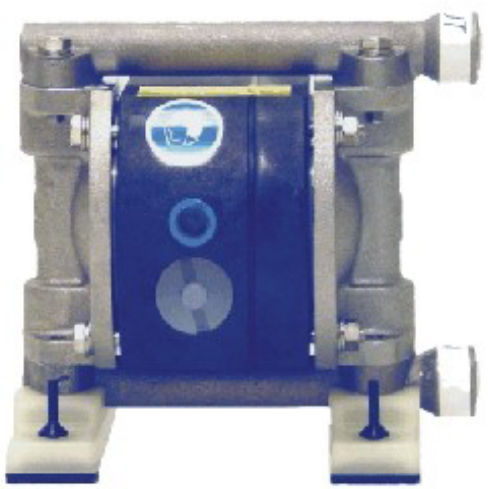

1Bar = 0,1MPa

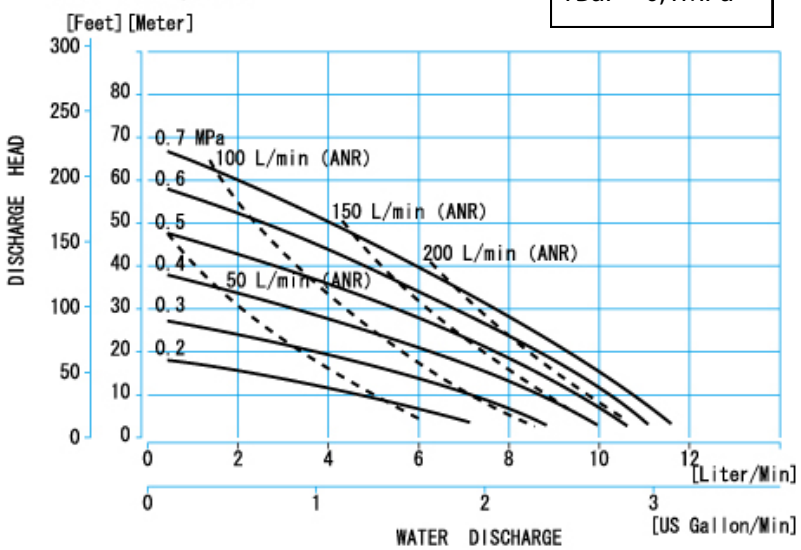
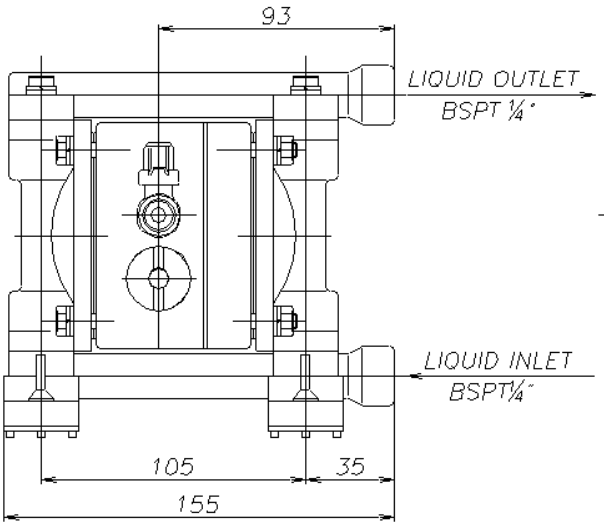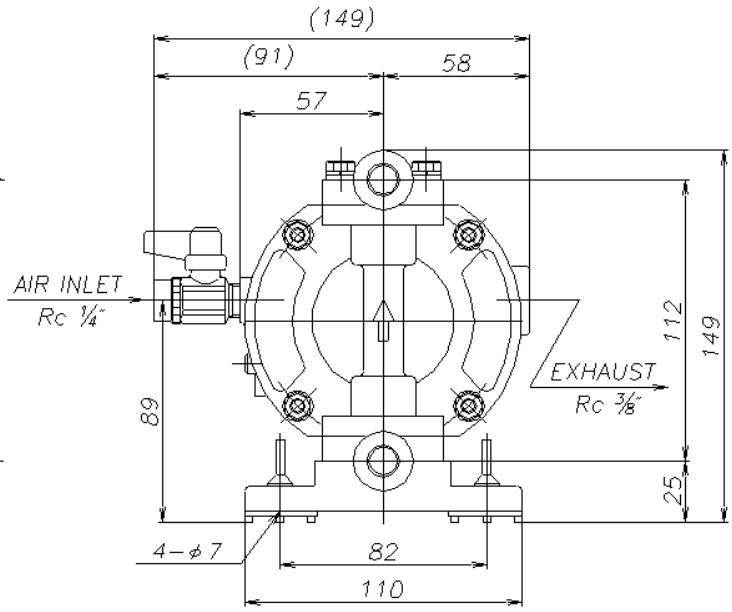
TECHNICAL DATA								
Air supply pressure		0,2 -0,7	MPa	Max. viscosity (neg. suc.)			500	Cp
Max. discharge volume/cycle		29	Cc	Max. viscosity (flooded suction.)			500	Cp
Max. discharge volume		11,7	L/min	Max. air consumption			250	NL/min
Max. discharge pressure		0,7	MPa	Max. noise level			81	dB(a)
Max. size of solids		-	mm	Operating temp. ambient			70	°C
Max. suction lift dry	PTFE fitted	1,5	m	Max operating temp. fluid				
Max. suction lift wet	PTFE fitted	2,3	m	Diaphragm compound				°C
Max. fluid inlet pressure	PTFE fitted	0,03	MPa	Diaphragm compound		PTFE	100	°C
Max. suction lift dry	Rubber fitted		m	Diaphragm compound				
Max. suction lift wet	Rubber fitted		m					
Max. fluid inlet pressure	Rubber fitted		MPa	Net Weight	Type A	ALU	1,5	Kg
Caution! Data based on water (1 Cp)								
Wetted parts: Pump chambers + manifolds				ADC12 - Aluminum				
Motor				PPS - Ryton