MDK-32•40-S6

No. **65-112**
Mar. 01, 2009

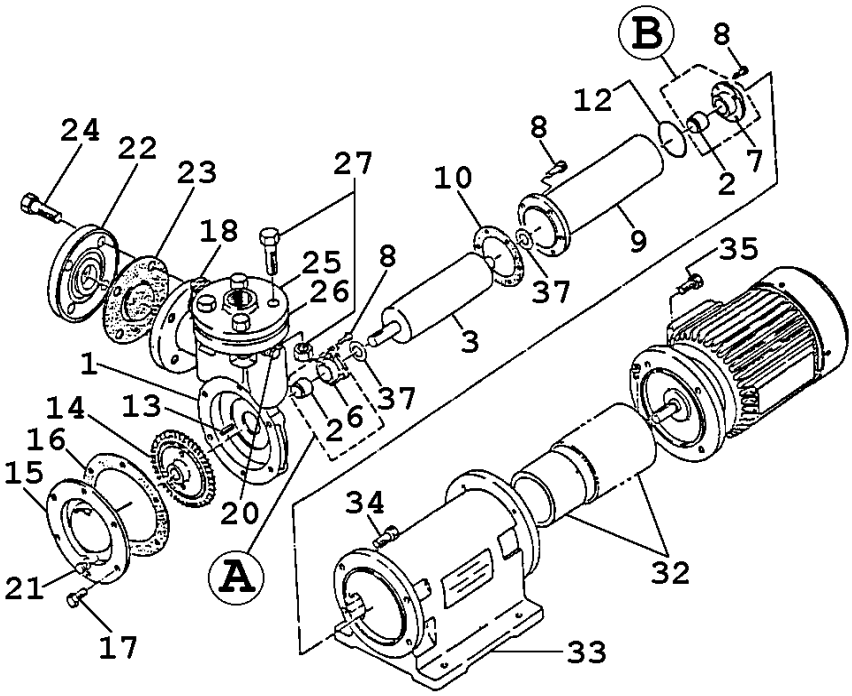

	Item	Description		Q'ty	Material	MDK-32-S6 Part No.		MDK-40-S6 Part No.	
	1	**Front Casing**		1	SCS14	**MDK0273**		**MDK0309**	
	2	**Bearing**		2	Carbon	**MDK0278**		**MDK0313**	
	*2			2	PTFE	**MDK0279**		**MDK0343**	
	3	**Magnet Capsule (+Spindle) Unit**		1	SUS316+SUS329J1	**MDK0274**		**MDK0310**	
	6	**Bearing Housing 'A'**		1	SCS14	**MDK0277**		**MDK0312**	
	7	**Bearing Housing 'B'**		1	SUS316 • SCS14	**MDK0282**		**MDK0315**	
	A	**Bearing Housing Set 'A'**		1	with **Carbon** Bearing	**MDK0275**		**MDK0311**	
	*A			1	with **PTFE** Bearing	**MDK0276**		**MDK0342**	
	B	**Bearing Housing Set 'B'**		1	with **Carbon** Bearing	**MDK0280**		**MDK0314**	
	*B			1	with **PTFE** Bearing	**MDK0281**		**MDK0344**	
**	8	**Cap Bolt • Bolt**	**M6x12•M8x16**	14	SUS316 equivalent	**MDK0211**		**MDK0256**	
	9	**Rear Casing**		1	SUS316	**MDK0284**		**MDK0317**	
	10	**Packing**		1	PTFE	**MDK0213**		**MDK0318**	
	12	**O-Ring**		1	PTFE	**MDK0215**		**MDK0320**	
	13	**Key**		1	SUS316	**MDK0216**		**MDK0321**	
	14	**Impeller**		1	SUS316	**MDK0289**		**MDK0322**	
	15	**Casing Cover**		1	SCS14	**MDK0290**		**MDK0323**	
	16	**Gasket**		5	PTFE	**MDK0291**		**MDK0324**	
	17	**Hex. Head Bolt**	**M8x16**	6	SUS316 equivalent	**MDK0256**		⇦	
	18	**Priming Plug** (with Gasket)		1	SUS316 (+PTFE)	**MDK0221**		⇦	
	20	**Air Vent Plug** (with Gasket)		1	SUS316 (+PTFE)	**MDK0360**		⇦	
	21	**Drain Plug** (with Gasket)		1•2	SUS316 (+PTFE)	**MDK0223**		⇦	
	22	**Suction Flange** (Rp1¼"•Rp1½")		1	SCS14	**MDK0296**		**MDK0329**	
	23	**Check Valve** (Model: 'TS')		1	SUS316+PTFE	**MDK0298**		**MDK0331**	
	24	**Hex. Head Bolt**	**M12x30**	4	SUS304 equivalent	**MDK0228**		⇦	
	25	**Discharge Flange** (Rp1¼"•Rp1½")		1	SCS14	**MDK0301**		**MDK0334**	
	26	**Flange Gasket**		1	PTFE	**MDK0302**		**MDK0335**	
	27	**Bolt with Nut**	**M12x50**	4	SUS304 equivalent	**MDK0303**		⇦	
	32	**Drive Magnet Unit** (1,5/2,2•4kW)		1	Steel+Ferrite	**MDK0304**		**MDK0337**	
	33	**Foot Support** [IEC 90•112 / 2-Pole]		1	FC150	**MDK0305**		**MDK0338**	
	34	**Hex. Head Bolt**	**M8x25•M10x25**	4	SUS304 equivalent	**MDK0306**		**MDK0307**	
**	35	**Hex. Head Bolt**	**M10x25•M12x30**	4	SUS304 equivalent	**MDK0307**		**MDK0228**	
	37	**Thrust Ring**		2	PTFE	**MDK0236**		**MDK0341**	

Notes: 1) Items marked with * are not standard but optional parts.
2) Foot Support for MDK-40-S6 (MDK0338) is equipped with an "Eye Bolt" (M10).

⚠Subject to change without prior notice! ⚠Actual pump may differ from the exploded view!