Rotating Electrical Machines

Operating instructions
Types: BEVI 2A/2D/3D/4A

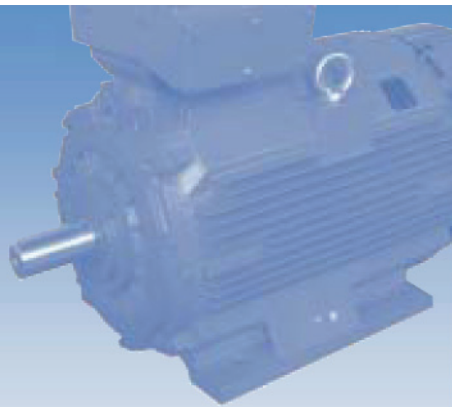

Totally enclosed fan-cooled (TEFC)
three-phase motors with squirrel cage
for low voltage, with antifriction bearings.

BEVI®

www.bevi.com

Installation And Maintenance Procedure

All 3 phase induction motors are manufactured in accordance with strict quality control procedures, have excellent functional and performance characteristics, and are of robust construction. To obtain optimum performance and service life from these motors please follow the instructions listed below.

1. SAFETY WARNING

These Electric Motors are designed for operation in Industrial applications and in normal service there is possible danger from rotating parts and/or live terminals. It is essential that these motors are only installed and services by qualified personnel in order to avoid injury or death and/or damage to equipment or buildings.
If there are any safety concerns regarding these motors please contact your nearest sales office for advice or assistance.
If there are any doubts about safety do not install the motor and do not attempt to operate it.
We canot be held responsible for damage as a result of installation or service by unqualified personnel.

2. ACCEPTANCE INSPECTION

Upon receiving the motors please carry out the following:
(a) Check that the description on the delivery note / docket agrees with your order specifications.
(b) Check that the rating, speed, etc. are in accordance with your requirements.
(c) Check for any damage, rust, dirt, foreign substance, etc. All motors should be received with a plastic shaft cover to protect the shaft during storage and transport.
(d) Check that the direction of rotation, if specified, is correct. If the motor has a low noise uni-directional fan a direction arrow is fitted to the motor.
(e) All motors 160 frame and above might be received with a shaft clamp. After removing the clamp, if applicable, manually turn the shaft and check for smooth quiet rotation.
If the motor is to be transported again, either alone, or with the equipment it is driving, the rotator and shaft must be clamped again to prevent brinelling of the bearings. Electric motors should not be transported by rail, as vibration from this method of transport has been known to cause brinelling of bearings.
If any defect is found please contact the nearest sales office immediately and provide the following information:

- Full nameplate details
- Details of your order number and delivery docket.
- Full description of the defect.

3. PRE-COMMISSIONING

Satisfactory operation of an electric motor depends on it location. Please ensure that the following factors have been taken into consideration.
(a) Ambient Temperature
The ambient temperature range in which a standard motor will operate without any problems is -15°C to +45°C. If motors are required to operate outside this temperature range, and were not specifically ordered and supplied for such conditions, please contact the nearest sales office for advice before proceeding.
(b) Ventilation
Please ensure that the motor is installed in a suitably ventilated area. Ensure that there is a free area in front of the air intake of at least a quarter of the shaft height. The exhausted air must not be re-circulated back over the motor, as this will reduce the effectiveness of the cooling system.
(c) Dust
If the air contains a high concentration of dust which is permitted to accumulate on the external surfaces of the motor, it may result in the motor overheating. If the dust is a problem it may warrant the use of a special motor.
(d) Hazardous Area
Ensure that the motor is certified for use in the area of operation. Hazardous areas require specially certified motors.
(e) Vibration
Ensure that the motor is installed on a solid floor, foundation, or rigid base, free from any external vibration.
(f) Mounting
Motors are designed for horizontal mounting and frames 100 and above are provided with suitably positioned condensation drain holes. All motors in frames up to and including 280 are mechanically suitable for mounting in any position subject to the drain holes being suitably positioned. Where it is required to mount larger frame sizes other than horizontal please contact your nearest sales office.
(g) Enclosure
All motors are Totally Enclosed Fan Cooled and have an enclosure rating of IP55 as a minimum. Motors with higher protection are available, but we recommend that IP56 and IP66 motors are supplied and used with space heaters to prevent the build up of condensation.

4. FITTING COUPLINGS AND ALIGNMENT

Extreme care must be exercised in lining up couplings as mis-alignment can be detrimental to the shaft and bearings. For direct drives, we recommend that flexible couplings are used. Please ensure that the alignment instructions given by the coupling manufacturer are followed. We recommend that couplings and pulleys are bored out with an H7 tolerance. Do not at any time use force in the fitting of couplings, pulleys etc. All motors are provided with a threaded hole in the drive end shaft to assist fitting and removal. A bolt should be used in this hole and a nut with a large washer used to press the coupling or pulley against the shoulder of the shaft. Care must be also be taken to ensure that the motor bearings are not subjected to end-thrust caused by the two halves of the couplings being squeezed too tightly together.
Please ensure that all couplings, belts, pulleys etc are properly and permanently guarded against accidental contact while the motor is running.
Care should be taken to ensure fixing bolts are correctly tightened. It is recommended that a flat washer and a spring washer are used to prevent too much stress on the foot or flange of a motor, and to prevent fixing bolts from becoming loose, see Fig 1. Normal hand tools should be used and bolts should only be tightened until the spring washer is fully compressed between the flat washer and the bolt head.

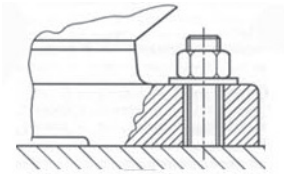

Electrical connections also need to be done correctly to ensure solid connections and avoid hot joints. The correct arrangement on the terminal stud is one flat washer, lug from the stator winding, another flat washer, full nut, flat washer, half nut, lug from supply cable, flat washer, spring washer and two half nuts. All of these nuts should be tight, but not over tight, as per Fig 2.
All fixing bolts and electrical connections should be checked and tightende if necessary after 100 to 200 hours of operation.

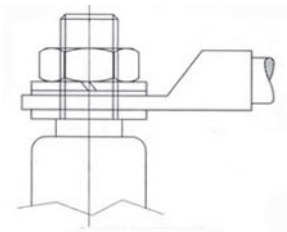

Recommended tightening torques for electrical terminals in NM

Installation And Maintenance Procedure

Stud diameter	M5	M6	M8	M10	M12	M16
Min.	1.8	3.0	8.0	10	20	60
Max.	2.5	4.0	9.0	17	30	73

5. BELTS DRIVES

Please ensure that the V-Belts are of the same manufacture and have the same dimensions. Also ensure that the belts are correctly tensioned in accordance with the manufacturers recommendations. If the V-Belts are not tensioned correctly it can cause belt and pulley wear and / or shaft and bearing damage. When replacing belts, it is recommended that all belts be replaced at the same time. It is not generally recommended to use two pole motors for belt drive applications. Please contact your sales office.

6. COMMISSIONING

Before starting the motor, please ensure that the following checks have been carried out:

(a) Motors fitted with grease nipples
Grease the motor while running and especially during start-up for the first time. If grease outlet plug fitted, remove temporarily when greasing, or permanently with automatic greasing.

(b) Wiring
Please refer to the motor nameplate for the method of connection. All motors are supplied with a connection diagram on the inside of the terminal box lid or on the motor nameplate. Ensure the motor is connected in the correct manner for the starter.

(c) Connection
All motors are provided with a spacious terminal box. They are mounted on top of the motor for all frames. All terminal boxes can be rotated in 90° steps.

(d) Earth Connection
All motors are provided with two earthing points, ensuring reliable and permanent connection of the motor to the earth with the protective conductor. The internal connection is located adjacent to the supply terminals inside the terminal box. The external connection is mounted on the stator frames for all frame sizes.

(e) Insulation Resistance
Check the insulation resistance between phase and earth, and between phases with a 500 volt or 1000 volt megger for 60 seconds. The reading must not be less than 5 megohms. After a long period of storage or standing idle in a moist environment, it is recommended that motors are died out or run on no load at approximately 20% of rated volts to ensure that any internal moisture is dried out.

(f) Starting
When a motor is operated for the first time it is recommended that it is run uncoupled from the load to ensure that the direction or rotation is correct and that there is no undue noise or vibration. Before running the motor make sure that any loose items such as shaft keys are removed or fixed so that they cannot “fly off” when the motor is switched on.
All motors are balanced in the factory with a half key. Motors can be run without the key fitted, or with the full key fitted, however this may cause a small amount of vibration.

(g) Reversing
To reverse the direction of rotation interchange any 2 of the 3 supply leads. In the case of incorrect rotation of a motor fitted with unidirectional fan please contact your nearest sales office.

(h) Frequency of Starting
Standard motors are capable of 2 starts in succession, of 3 seconds duration each start, with the motor at normal running temperature. Standard motors are also suitable for 6 evenly spaced starts per hour. If starting frequency in excess of the above is required please contact your nearest sales office.

(i) Thermistors
Motors 160 frame and above are supplied with thermistors as standard in some countries. The thermistors are terminated in the main terminal box unless separate terminal boxes are specified. Please note that if thermistors are to be checked for continuity, the maximum voltage applied MUST NOT exceed 2.5 volts d.c. (an ohmmeter can be used, but a Megger cannot).

(j) Heaters
Where space heaters are fitted, they should be checked for continuity prior to connection to the control circuit. Supplies are normally 220-240 V single phase.

7. BEARINGS

The bearings in all motors are lubricated with lithium based grease. Motors running in high or low ambient temperatures may require special bearings and almost certainly special grease. As standard the motors are supplied with the following bearings:
(a) Frames 63-132
These motors have C3 internal clearance double shielded “sealed for life” ball bearings. These bearings are not designed to be regreaseable.
(b) Frames 160-280
These motors have open bearings with a C3 internal clearance. Grease nipples are fitted and the motors are regreaseable as standard. These motors are fitted with a grease relief plug which must be removed to allow the old grease to purge during regreasing. It is recommended that the motor should be run for 2 hours with the plug removed when the new grease is added. We recommend that the motors are checked by commisioning and thereafter every three months and regreased if necessary. Please refer to the separate bearing and regreasing page.
(c) Frames 315-355
These motors have open bearings with a C3 internal clearance and automatic grease relief as standard. We recommend these motors are checked by commisioning and thereafter every three months and regreased if necessary. We recommend that these motors are regreased whilst they are running. It is essential that the grease nipples are always cleaned before each lubrication to ensure dirt does not enter the bearings.
Recommended greases for normal applications are :
Frames 63-132 SKF LGMT2
Frames 160-355 BP LS3 SHELL ALVANIA R3
Mixing different greases is not recommended, as not all greases are compatible with each other.
If the motor is subject to any axial thrust, please contact your nearest sales office, as special thrust bearings may be necessary.
For motors without grease relief facilities the old grease must be cleaned out from time to time by removing the bearing cap and \ or endshield. The bearing and housing must then be repacked with grease and reassembled. Do not overfill the bearing housing - it should not be more than a quarter full of grease after reassembly. The bearing details and regreasing information are shown on the bearing and regreasing page.

8. MAINTENANCE

We recommend that if a motor is used continuously that it is removed for inspection and dismantled every 5 years. Items that should be checked and recorded are:
(a) Insulation resistance and temperature at which it is measured. (Expect the insulation level to be low if the motor is hot)
(b) Inspection of the bearings and check for discoloration of the grease.
(c) Tightness of “ V-Belts” and alignment of couplings.
(d) Ensure that the holding down bolts are tight and the base plate or foundations are rigid.
(e) Cleanliness inside and outside the motor.

9. FAULT FINDING

Please see separate fault finding page.

Parts Lists

TYPE 2A63-2A132 AND
2D80-2D132

	Parts description
1	Endshield D.E. with oil seal
2	Wave washer
3	Bearing D.E.
4	Terminal box
5	Terminal box lid
6	Stator lamination pack
7	Rotor lamination pack
8	Stator frame
9	External earth stud
10	Endshield N.D.E. with oil seal
11	Bearing N.D.E.
12	Fan cowl
13	Fan

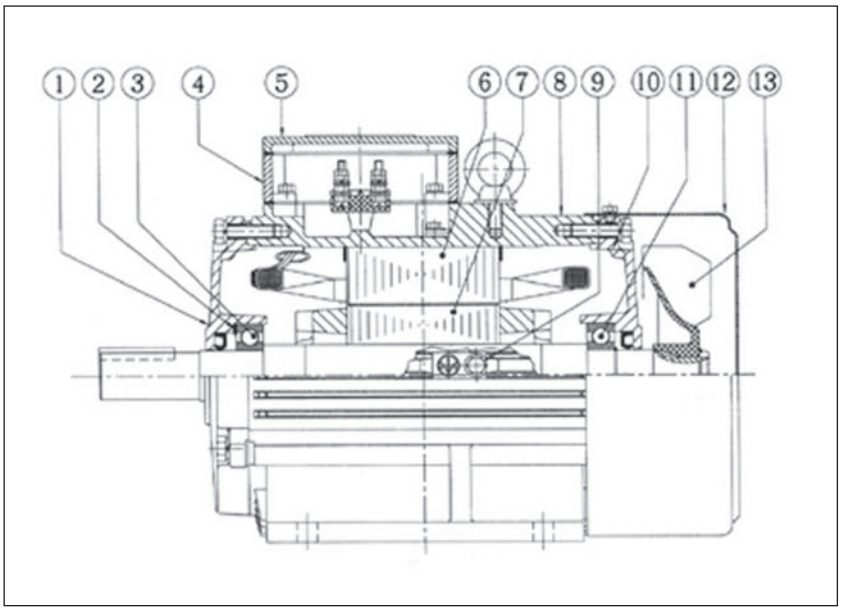

TYPE 2D315-2D355

	Parts description
1	Outer bearing cap D.E. with oil seal
2	Wave washer
3	Bearing D.E.
4	Inner bearing cap D.E.
5	Endshield D.E.
6	Terminal box lid
7	Terminal box
8	External earth stud
9	Rotor lamination pack
10	Stator lamination pack
11	Nameplate
12	Stator frame
13	Inner bearing cap N.D.E.
14	Endshield N.D.E.
15	Fan
16	Fan cowl
17	Bearing N.D.E.
18	Outer bearing cap N.D.E with oil seal

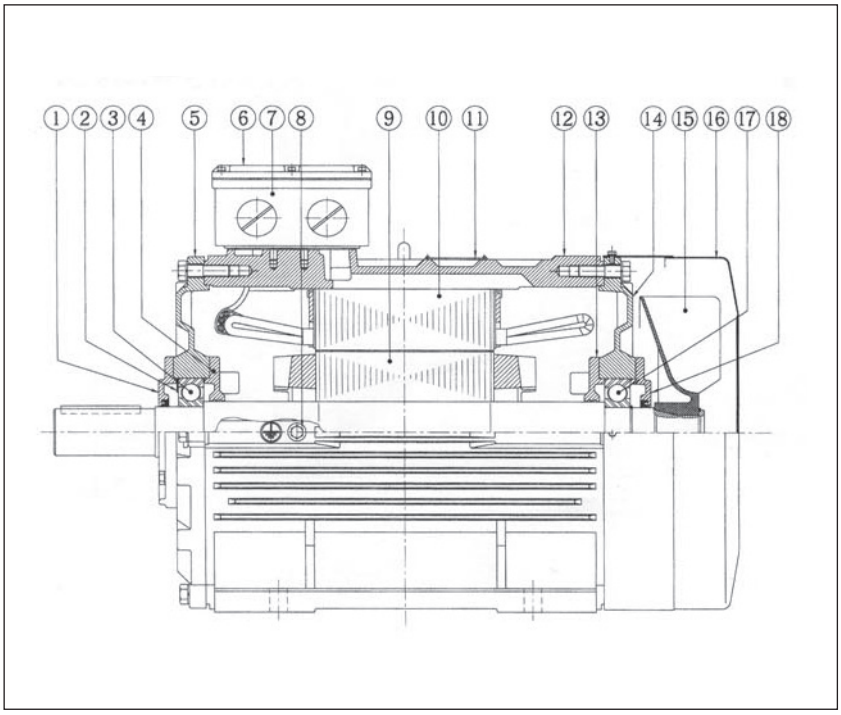

Parts Lists

TYPE 2D315-2D355

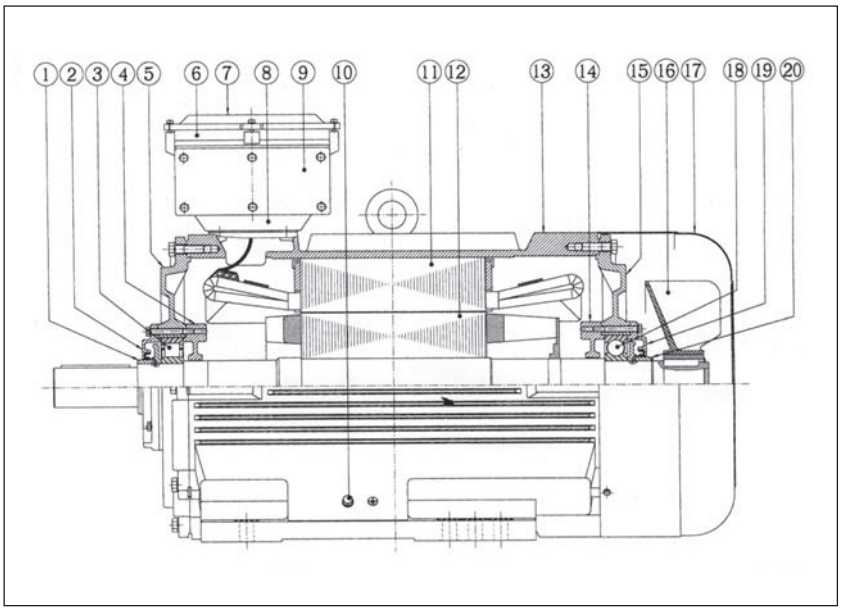

	Parts description
1	Flinger D.E.
2	Outer bearing cap D.E. with oil seal
3	Bearing D.E.
4.	Inner bearing cap D.E.
5	Endshield D.E.
6	Terminal box
7	Terminal box lid
8	Terminal box adapter
9	Removable gland plate, undrilled
10	External earth stud
11	Stator lamination pack
12	Rotor lamination pack
13	Stator frame
14	Inner bearing cap N.D.E.
15	Endshield N.D.E.
16	Fan
17	Fan cowl
18	Bearing N.D.E.
19	Outer bearing cap N.D.E. with oil seal
20	Flinger N.D.E.

Fault Finding - Three Phase Induction Motors

Motor will not start.

Supply or starter trips out at start.

Motor starts but has not torque.

Motor does not reach full speed.

Motor takes a long time to reach full speed.

Motor overheating.

No load amps in excess of full load amps.

Mechanical noise or Vibration.

Noisy bearings.

Bearing overheating.

Motor amps in excess of nameplate full load amps on load.

Excessive electrical noise.

Unbalanced amps in different phases when motor on load.

Motor runs wrong direction.

Motor will not start.	1. Fault with supply.	1. Check for correct voltage at motor terminals.	1. Fit new fuses, reset circuit breakers, etc.
	2. Motor or load locked up.	2. Make sure motor and load are free to turn.	2. Remove clamps, locks, etc.
	3. Wrong connections in control circuit.	3. Check to ensure contactors operate.	3. Sort out control circuit.
Supply or started trips out at start.	1. Wrong or loose connections.	1. Check all lugs are properly crimped or soldered, and connections are tight.	1. Fix up connections.
	2. Motor overloaded.	2. Check load performance data against motor performance data.	2. Change motor for correct size.
	3. Inertia of load to high.	3. Measure voltage at motor terminals while motor starting.	3. Change cables for correct size.
	4. Low voltage due to volt drop in cables.	4. Check settings of overload and circuit breaker and allow for starting current.	4. Correct setting of overload or breaker or change.
	5. Overload or circuit breaker incorrectly set or sized.		
Motor starts but has no torque. Motor does not reach full speed or takes a long time to accelerate.	1. Incorrect connection.	1. Check connection diagram and nameplate data.	1. Sort out and correct connections.
	2. Delta wound motor connect in Star.	2. Check load performance data against motor performance data.	2. Check timer and starter control circuit.
	3. Star/Delta starter staying in Star.	3. Measure voltage at motor terminals while motor starting.	3. Change motor for correct size.
	4. Intertia of load to high.		4. Change cables for correct size.
	5. Motor overloaded		
	6. Low voltage due to volt drop in cables.		

Fault Finding - Three Phase Induction Motors

Motor overheating.	1. Motor overloaded.	1. Check load performance data.	1. Fix problem with load or fit larger motor.
	2. Ineffective cooling. temperature of air. Look for build up of dirt.	2. Check fan and air flow	2. Clean motor. Sort of cooling of air temp and flow.
	3. Excessive ambient.	3. Check connections diagram and nameplate data.	3. Sort out connections.
	4. Wrong connection.	4. Check volts and amps in all three phases.	4. Restore supply to all phases.
	5. Delta wound motor in star.	5. Check nameplate.	5. Correct voltage or frequency.
	6. Motor “Single Phasing”.	6. Measure phase to phase voltage accurately.	6. Balance supply or accept undbalance.
	7. Wrong voltage or frequency.		
	8 Supply voltage unbalanced.		
No load amps in excess of full load amps.	1. Incorrect connection	1 & 2. Check connection diagram and nameplate data.	1 & 2. Sort out and correct connections at motor terminals.
	2. Star wound motor connection Delta.		
	3. Voltage in excess of nameplate	3. Measure voltage at motor terminals	3. Correct supply voltage.
	4. Motor supplied for different	4. Compare supply voltage and frequency to nameplate.	4. Change motor for correct voltage and frequency.
Mechanical noise or vibration. Noisy bearings. Bearings overheating.	1. Thrust from load or misalignment.	1. Check gap between coupling halves and alignment.	1. Re-align couplings.
	2. Damaged bearings, too much grease, no grease, or foreign matter in grease.	2 & 3. Turn shaft slowly by hand and feel for roughness or stiffness. Check for bent shaft or fan rubbing.	2 & 3. Clean bearing housing, change bearings and repack with fresh grease.
	3. Rotor pulling or foreign matter in air gap.		
	4. Out of balance load, coupling or pulley.	4. Run motor disconnected from load and then with pulley or coupling removed.	4. Fix up out of balance items.
	5. Excessive belt pull.	5. Run motor without belts.	5. Loosen belt tension.
	6. Motor foundations not rigid.	6. Check design and constructions foundations.	6. Increase strenght of foundations.
Motor amps in excess of nameplate full load amps on load.	1. Motor overloaded	1. Check load and performance data.	1. Fix problem with load or fit larger motor.
	2. Low supply voltage	2. Measure voltage at motor terminals	2. Fix problem, maybe with larger cables.
	3. Wrong voltage or frequency.	3. Check nameplate.	3. Correct voltage or frequency.
	4. Wrong Connections.	4. Check nameplate.	4. Sort out and correct.
	5. Motor ‘Single-Phasing’.	5 & 6. Check volts and amps in three phases.	5 & 6. Restore balanced supply to all three phases.
	6. Supply voltage unbalanced.		
	7. Measure motor not matched to load.	7. Measure motor speed and check load speed requirements.	7. Change motor for correct motor speed.

Fault Finding - Three Phase Induction Motors

Excessive electric noise.	1. Wrong connections.	1. Check connections.	1. Fix up connections.
	2. Wrong voltage	2. Check voltage with nameplate	2. Correct voltage.
	3. Motor 'Singe-Phasing'.	3. Check volts with amps in all three phases.	3. Restore supply to all three phases.
Unbalanced amps in different phases when motor loaded.	1. Unbalanced supply voltage	1. Measure phase to phase voltage accurately.	1. Balance supply or accept unbalance.
Motor runs in wrong direction.	1. Wrong connections.	1. Watch shaft rotation.	1. Swap and two phases or supply.

Fault Finding - Single Phase Motors & Standard Controllers

'ACO' (and 'MCO') Does not Close when Started is Called for.

'ACO' Closes But 'MCO') Does Not.

'ACO' and 'MCO' Close but Motor Fails to Rotate.

Supply Fuse(s) Blow When Motor Attempts to Start.

Overload 'T.O.L.' Trips During Run-Up.

Overload 'T.O.L.' Trips During Running.

Motor Stalls When 'ACO' Opens After Run-Up.

'ACO' Does Not Open When Motor up to Speed.

Problem	Possible Cause
'ACO' (and 'MCO') Does not Close when Start is Called for.	1. Fault with supply.
	2. Power supply absent at terminals L1, L2 and N.
	3. External control circuit is blocking operation.
	4. Thermal Overload 'T.O.L' is tripped.
	5. Control fuse 'CF1' is blown.
	6. 'ACO' coil is open circuit.
	7. Controller wiring is faulty.
	8. Electronic switch 'SC' is faulty.
'ACO' Closes But 'MCO' Does Not.	1. 'MCO' coil is faulty.
	2. Controller wiring is faulty.
'ACO' and 'MCO' Close but Motor Fails to Rotate.	1. Supply fuse for L2 is blown.
	2. Wiring between motor and controller faulty.
	3. Power supply drop excessive during start due to site conditions.
	4. Power supply drop increased due to faulty line capacitors 'CL' (controllers 11kW and above only).
	5. Faulty start capacitors 'CS'.
	6. Mechanical load is excessive.
	7. Controller wiring is faulty.
	8. Motor winding is faulty.

Fault Finding - Single Phase Motors & Standard Controllers

Supply Fuse(s) Blow When Motor Attempts to Start.	1. Supply fuses are undersized.
	2. Faulty line capacitors ‘CL’ (controllers 11kW and above only).
	3. Faulty start capacitors ‘CS’.
	4. Faulty start capacitors ‘CR’.
	5. Controller wiring is faulty.
	6. Motor winding is faulty.
Overload ‘T.O.L’ Trips During Run-Up	1. ‘T.O.L’ setting is incorrect.
	2. Motor taking too long to start due to adverse mechanical load and/or supply voltage.
	3. Faulty start capacitors ‘CS’
	4. Faulty line capacitors ‘CL’ (controllers 11kW and above only).
	5. ‘T.O.L’ is faulty.
Overload ‘T.O.L’ Trips During Running.	1. ‘T.O.L’ setting is incorrect.
	2. Mechanical load is excessive.
	3. Supply voltage is too low during running.
	4. Faulty run capacitors ‘CR’
	5. ‘T.O.L’ is faulty.
Motor Stalls When ‘ACO’ Opens After Run-Up.	1. Mechanical load is excessive.
	2. Faulty run capacitors ‘CR’.
	3. Controller wiring is faulty.
	4. Electronic switch ‘SC’ is faulty
	5. Motor winding is faulty.
‘ACO’ Does Not Open When Motor up to Speed.	1. Supply voltage not equal each side of neutral.
	2. ‘ACO’ is stuck closed.
	3. Faulty start capacitors ‘CS’.
	4. Controller wiring is faulty.
	5. Electronic switch is faulty.

Bearing Sizes & Regreasing Information

Squirrel Cage Electric Motors
STANDARD: C3 “SEALED FOR LIFE”
DOUBLE SHIELDED ZZ BEARINGS.
NOT REGREASEABLE.

NOTES:
1. Motors fitted with grease nipples grease the motor while running and especially during start-up for the first time. If grease outlet plug fitted, remove temporarily when greasing and make sure that old grease is coming out from outlet plug, or that old permanently with automatic greasing.
2. Vertical motors should be regreased at half the time specified above for horizontal motors.
3. It is recommended that “Sealed for Life” bearings are replaced with new bearings when they are due for regreasing. It is possible to remove the shield from the outboard side of these bearings, clean them out, and repack them with fresh grease, but it is not recommended. (The grease is retained between the inboard bearing shield and the oilseal in the endshield, as all motors are IP55 and fitted with an oilseal at both ends).
4. Regreasing time should be reduced if bearing operating temperature is in excess of 70°C.
5. n = R.P.M

BEARINGS IEC FRAME SIZE	BEARING D.E.	BEARING N.D.E.	REGREASING PERIOD HOURS			QUANTITY GRAMS
			n <3600	n <1800	n<1200	
2A/4A 63	6201 ZZ	6201 ZZ	30000	30000	30000	1,5
2A/4A 71	6202 ZZ	6202 ZZ	30000	30000	30000	2
2A/4A 80	6204 ZZ	6204 ZZ	30000	30000	30000	3,5
2A/4A 90	6205 ZZ	6205 ZZ	28000	30000	30000	4
2A/4A 100	6206 ZZ	6206 ZZ	25000	30000	30000	6
2A 112	6206 ZZ	6206 ZZ	20000	20000	30000	7
4A 112	6306 ZZ	6306 ZZ	18000	20000	30000	9
2A 132	6208 ZZ	6208 ZZ	15000	15000	30000	10,5
4A 132	6308 ZZ	6308 ZZ	12000	12000	30000	13
2D/3D 160	6309	6309	6000	12000	18000	13
2D/3D 180	6311	6311	4000	10000	15000	15
2D/3D 200	6312	6312	3500	8500	13000	20
2D/3D 225 2P	6312	6312	3500			20
2D/3D 225 4-8P	(6313)	6313	1500	3000	4800	22
2D/3D 250	(6314)	6314	1000	2500	4500	30
2D 280 2P	6314	6314	2000			30
2D 280 4-8P	(6317)	6317		2000	3000	30
3D 280	(6316)	6316		2000	3000	30
2D 315 2P	6317	6317	1200			30
3D 315 2P	6316	6316	1200			30
2D/3D 315 4-8P	(6319)	6319		2000	3000	45
2D/3D 355 2P	6319	6319	1200			45
2D/3D 355 4-8P	(6322)	6322		1400	2200	60

All bearings with C3 clearance

Bearing And Greasing Arrangements

2A80-132 FRAME

Standard bearing arrangement
Suitable for B3 and V1.

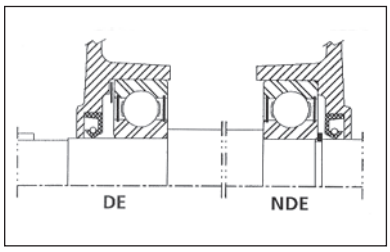

Non drive and loacated.
Suitable for B3 and V1.

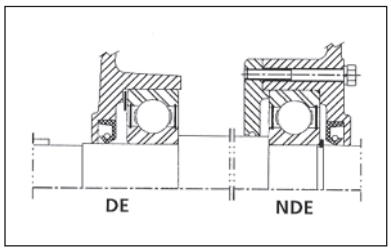

V1 motor with DE '7' series thrust bearings, with regreasing and grease relief.
Suitable for B3 and V1

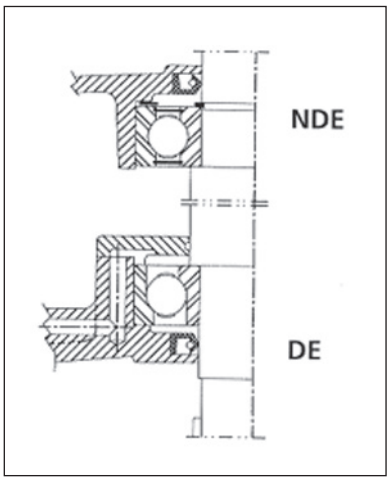

2D160-280 FRAME

Standard bearing arrangement with regreasing and grease relief.
Suitable for B3.

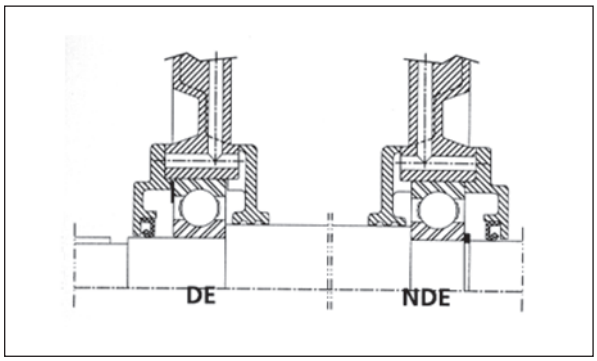

2D315-355 FRAME

Standard bearing arrangement with regreasing and grease relief.
Suitable for B3 and V1.

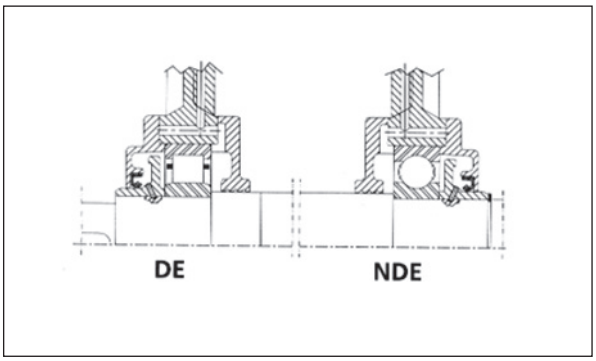

V1 motor with DE '7' series thrust bearings located, with regreasing and grease relief.

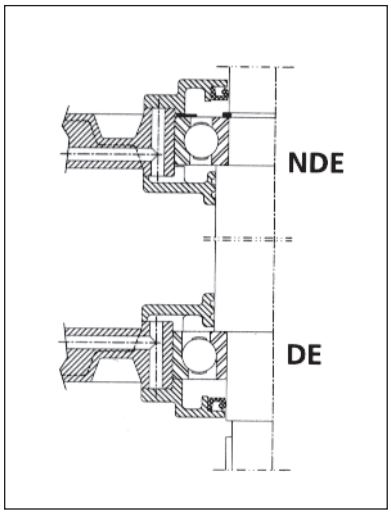

V1 motor with NDE '7' series thrust bearings.

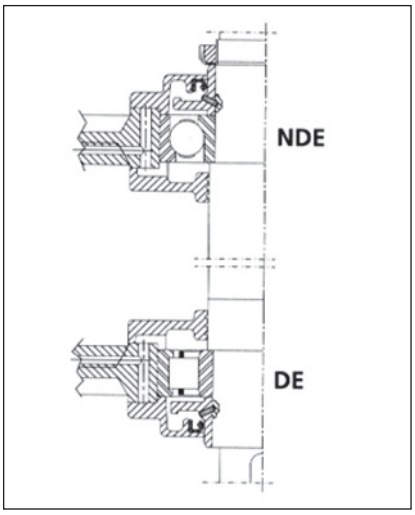

www.bevi.com

BEVI AB
Bevivägen 1
SE-384 30 Blomstermåla
Tel. +46 499 271 00
Fax +46 499 200 08
sales@bevi.se
www.bevi.se

BEVI NORD AB
Kontaktvägen 8
SE-901 33 Umeå
Tel. +46 90 70 44 30
Fax +46 90 13 96 60
bevinord@bevi.se
www.bevi.se

BEVI Danmark A/S
Baldersbuen 14
DK-2640 Hedehusene
Tel. +45 39 673605
Fax +45 39 675660
bevi@bevi.dk
www.bevi.dk

BEVI Norge A/S
Ulvenveien 90 B
NO-0581 Oslo
Tel. +47 22 076650
Fax +47 22 721669
info@bevi.no
www.bevi.no

BEVI Finland OY AB
Hannuksenpelto 6
FI-02270 Espoo
Tel. +358 9 27091210
Fax +358 9 27091219
info@bevi.fi
www.bevi.fi

BEVI EST OÜ
Pärnu mnt. 238
EE-116 24 Tallinn
Tel. +372 6828 755
Fax +372 6828 754
bevi@bevi.ee
www.bevi.ee

BEVI UAB
Savanoriu pr. 219
LT-02300 Vilnius
Tel. +370 5 261 11 12
Fax +370 5 266 00 69
info@bevi.lt
www.bevi.lt

BEVI CHINA
201 Xin Jinqiao Road
201206 Shanghai
Tel. +86 21 5032 5200
Fax +86 21 5032 5202
sales@bevi.cn
www.bevi.cn